WOODBRIDGE®

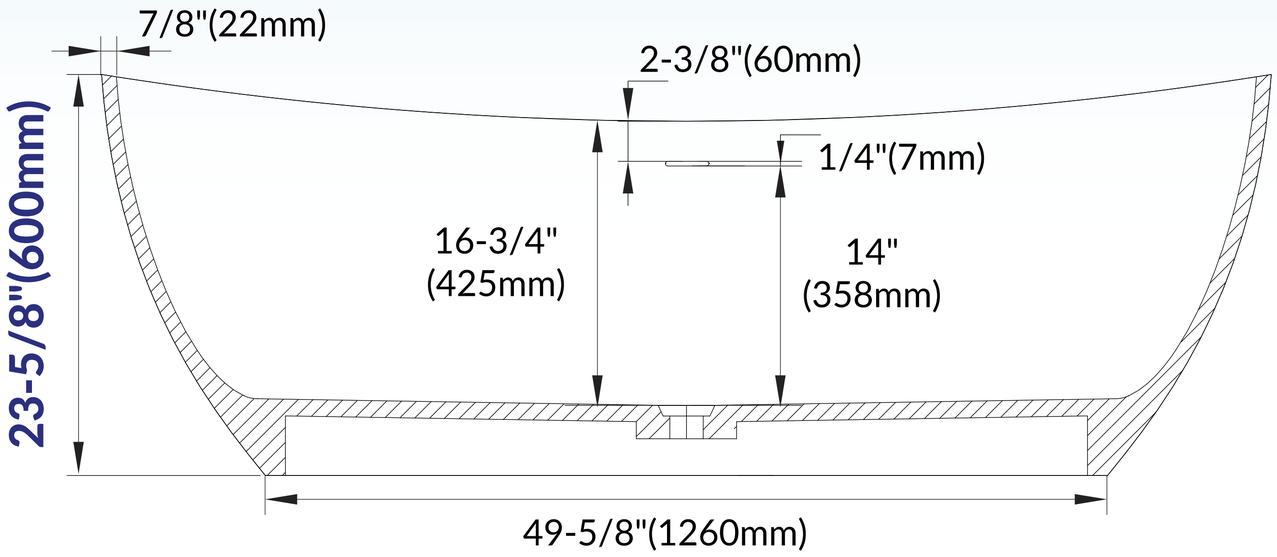

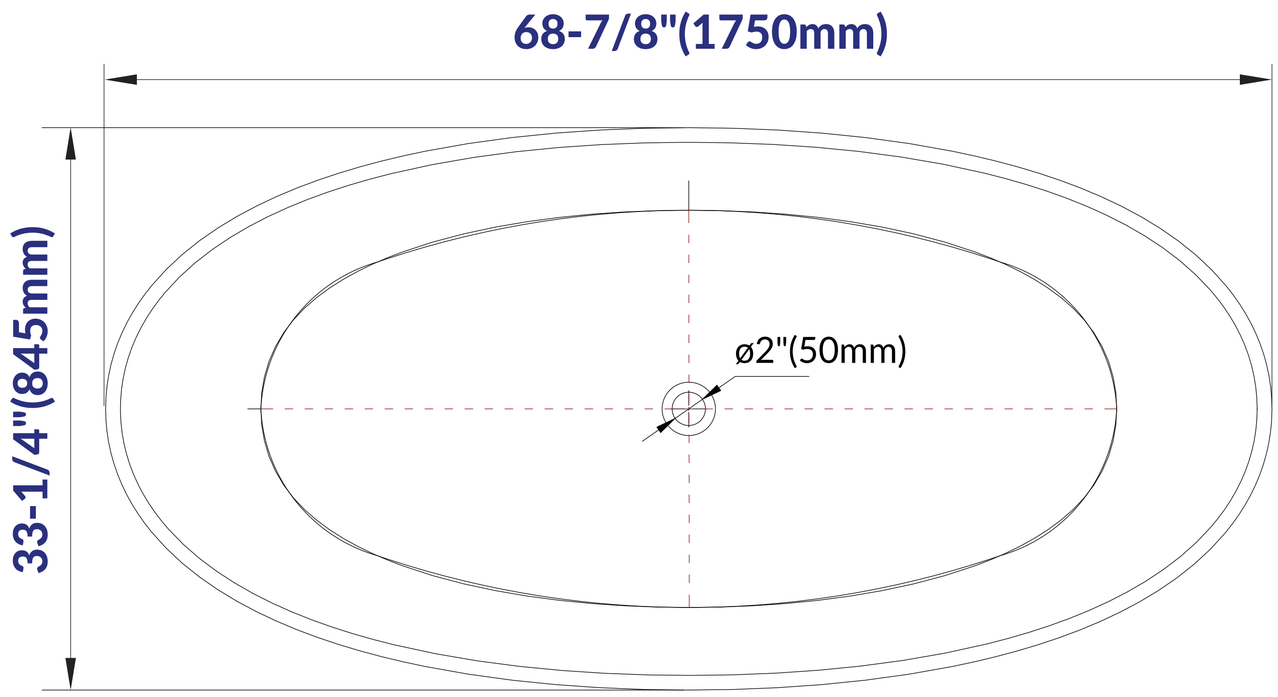

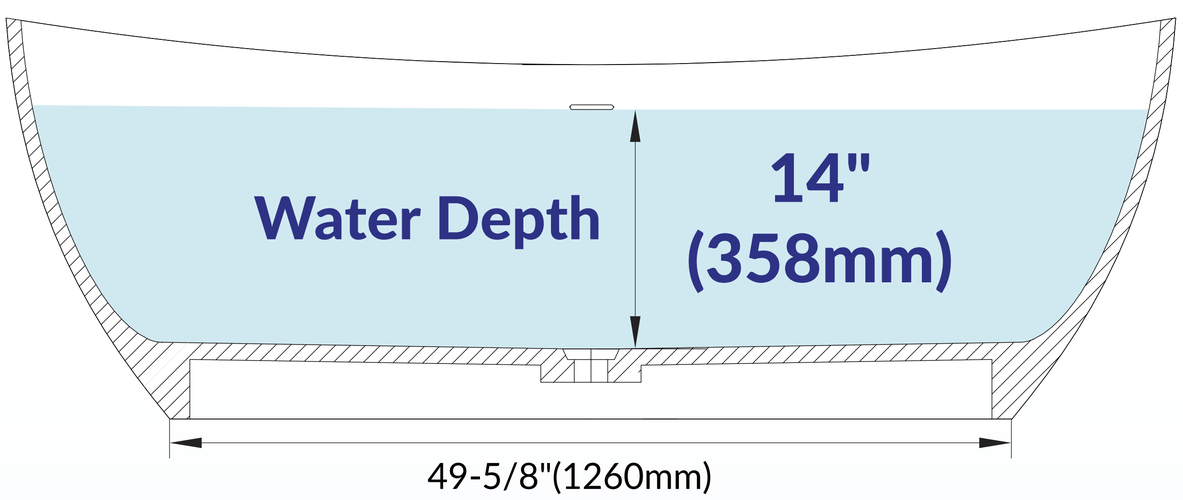

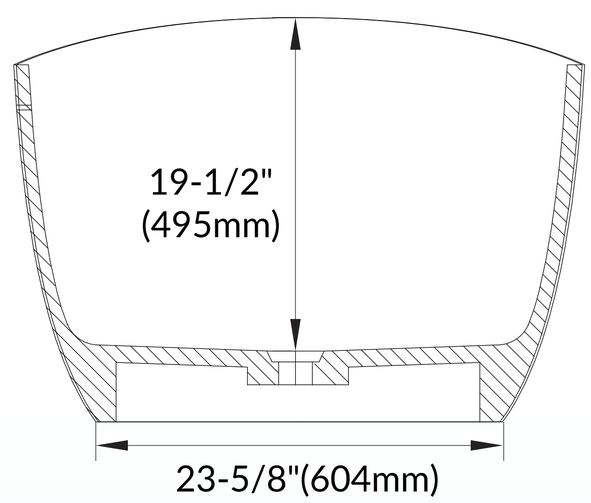

IMPORTANT INFORMATION

- Measurements are ± 1/2" and subject to change without notice
- Specifications & Configurations are subject to change without notice
- Please measure tub on-site before installation
- Measurements herein supersede all others published prior to publication date shown below
- Before ordering or installing, please consider future access to equipment